63203

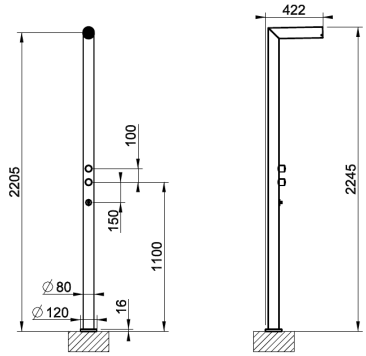

External Parts for two exits shower column, to be completed with 63212 kit and SpotWater in the desired finish.

TECHNICAL FEATURES

- **Height:** 2.245 mm
- **Width:** 120 mm
- **Depth:** 422 mm
- **Water mixing type:** Mechanical mixing
- **Cartridge type:** Mixer cartridge
- **Cartridge size:** 35 mm
- **Number of water outlets:** 2 exits
- **Diverter type:** Rotary diverter
- **Handshower support type:** Fixed
- **Flow rate:** 11 l/min

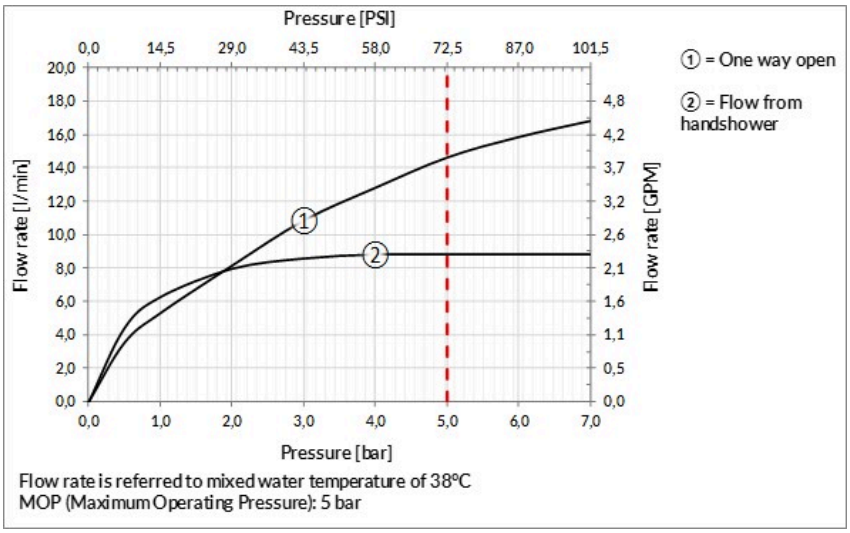

CERTIFICATIONS

- Water tightness resistance and long term functionality in accordance with EN-817
- The main components in contact with drinking water comply with ACS requirements, UBA list, KTW BWGL

Production managed by a certified quality System compliant with ISO 9001:2015
For additionals approval contact Gessi S.P.A.

TECHNICAL PRESCRIPTION

- Working maximum pressure value 72.5 PSI - in case of higher pressure, to use a pressure reducer.
- Working pressure for an optimal installation: 43.5 PSI.
- Supply the product with mains water with a maximum temperature of 70 °C and for short periods of use.
- In order to guarantee a long duration of the product and its total functionality install filter.
- Test watertight and cleaning of the pipes before installing the tap.

In any case please refer to the instruction manual and warranty provided with the product.

Product, measurements and specifications shown are subject to change without notice. Please refer to the current price list for further information.
Gessi S.p.A. Parco Gessi, 13037 Serravalle Sesia (vercelli) Italy - Tel. +39 0163 454111- www.gessi.com - lead@gessi.it

GESSI®

INDICATIONS FOR CLEANING

Clean only with a new microfiber cloth and soapy water and properly dry the item. Detergents, solvents, chemical agents, abrasive sponges, wire, wool, alcohol, etc. should not be used as these could irreparably damage product surfaces compromising its aesthetics and brightness.

ACCESSORIES AND FITTINGS

For additional matching bathroom accessories and fittings available, see official Gessi price list.

FINISHES CHARACTERISTICS

CHROME

The galvanic process is the basis of almost all Gessi finishes. The first production step consist in covering component with several layers of coating by electrochemical reactions. It makes durable finishes, virtually impervious to wear or scratches. Chrome has high resistance to corrosion and is easy to clean.

STAINLESS STEEL

Not many materials can praise a resistant similar to the stainless steel, that never, in every environmental condition, loose the proper shining, perfect elegance, the rich color, asking also a really minimum maintenance. Recyclable 100%, steel can be regenerated and reused forever, permitting to reduce the consumption of natural resource.

PVD COLORS

PVD are innovative finishes that allow best performances and technical qualities, characterized by unique mechanical resistance and exceptional brightness, that are made by letting vapours of metallic alloys deposit on chromed component. This process makes it possible to achieve excellent resistance to corrosion and abrasion. In addition, the technology allow for a great variety of colors according to the metal that are used.

LAQUERED

Laquered finishes, with their peculiar aesthetic performance, are made by covering the product with various layers of different kind of lacquer. For example, in order to obtain the aged look the process start with sandblasted component, that is firstly lacquered in gold and then in black or brown, then highly specialized artisans manually brush the surface, bringing back to light the golden tones.

For additionals finishes contact Gessi S.P.A

Product, measurements and specifications shown are subject to change without notice. Please refer to the current price list for further information.
Gessi S.p.A. Parco Gessi, 13037 Serravalle Sesia (vercelli) Italy - Tel. +39 0163 454111- www.gessi.com - lead@gessi.it